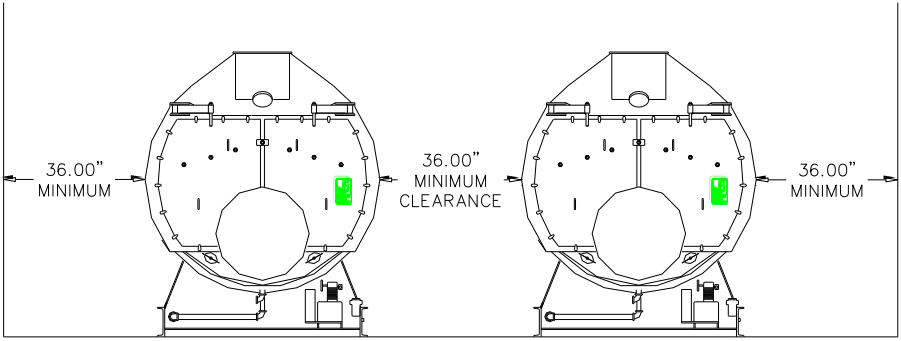
36.00"
MINIMUM
36.00"
MINIMUM
CLEARANCE
36.00"
MINIMUM

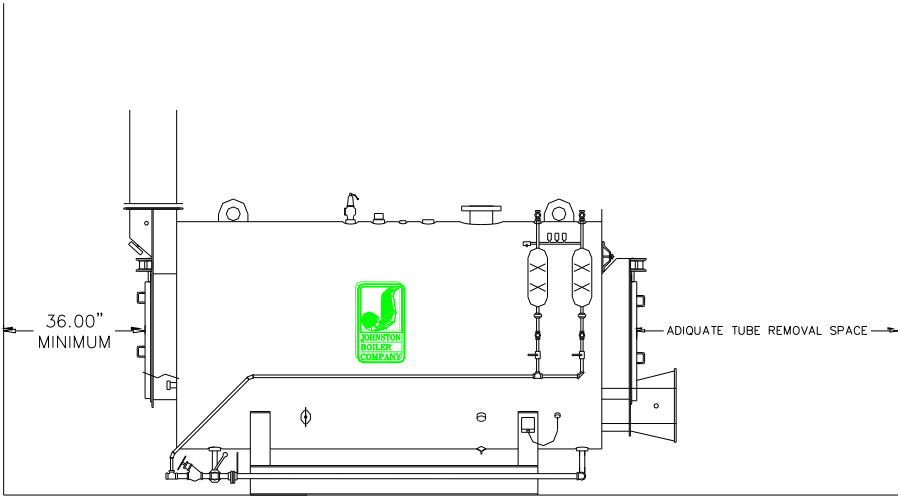
36.00"
MINIMUM
JOHNSTON
BOILER
COMPANY
ADIQUATE TUBE REMOVAL SPACE