NOTES:

1. MINIMUM AISLE CLEARANCE 36" FROM BOILER SIDES AND REAR. (THIS REQUIREMENT MAY VARY WITH LOCATION. CHECK STATE AND LOCAL CODES IN THE AREA OF INSTALLATION.)
2. OPTIONS AND ADDITIONAL EQUIPMENT ORDERED MAY AFFECT OVERALL DIMENSIONS. DRAWINGS ARE FOR STANDARD BOILER PACKAGE.

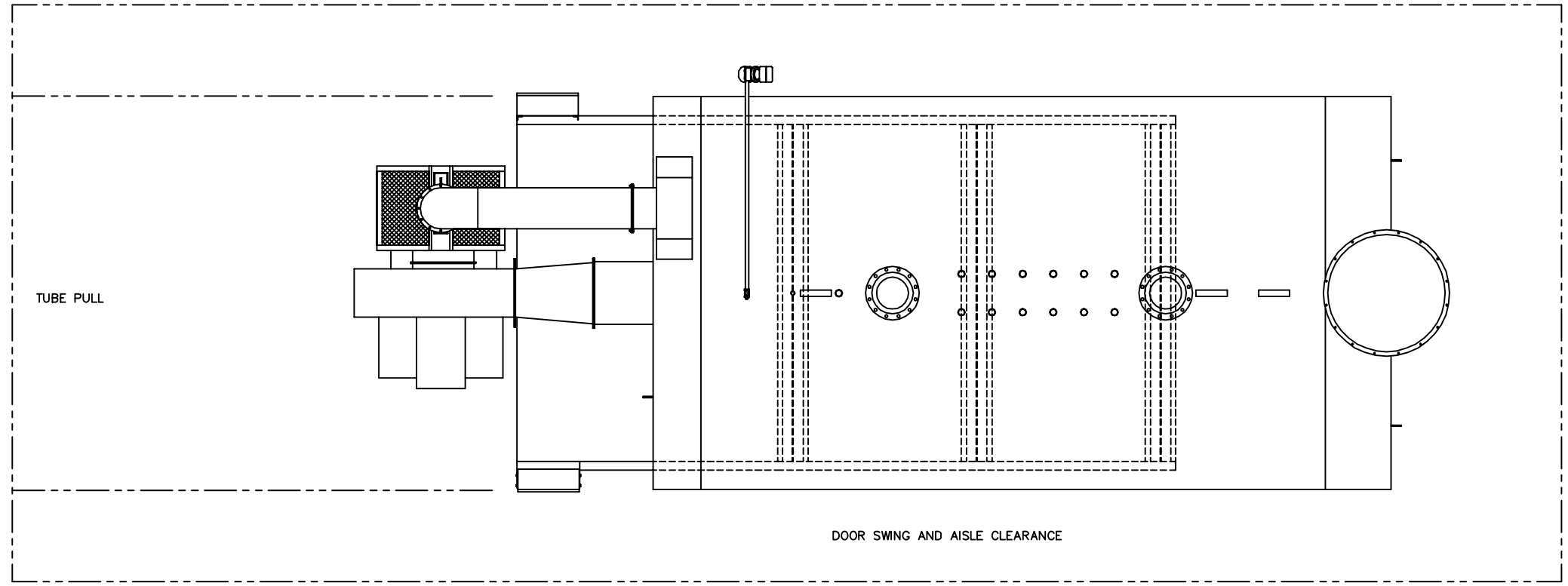

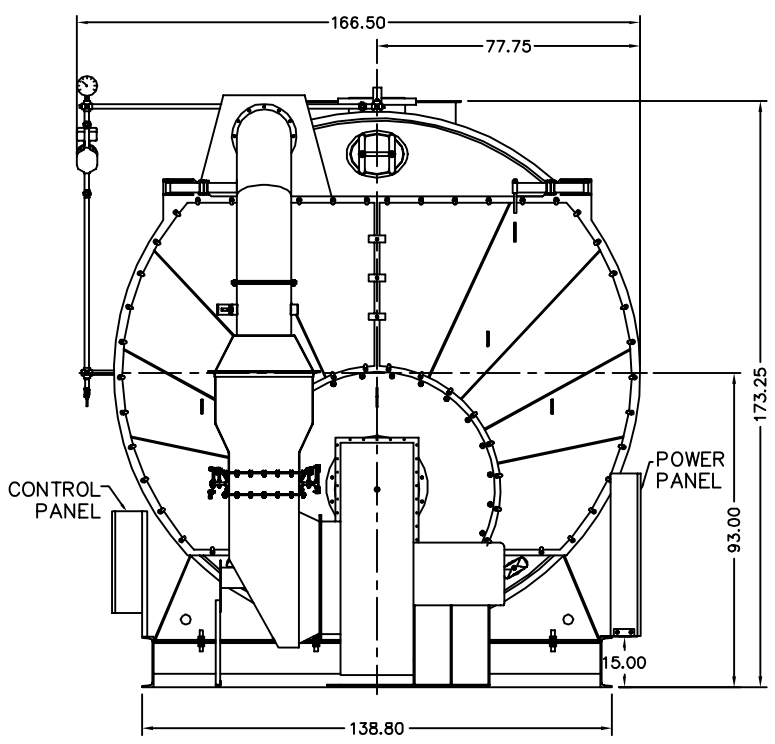

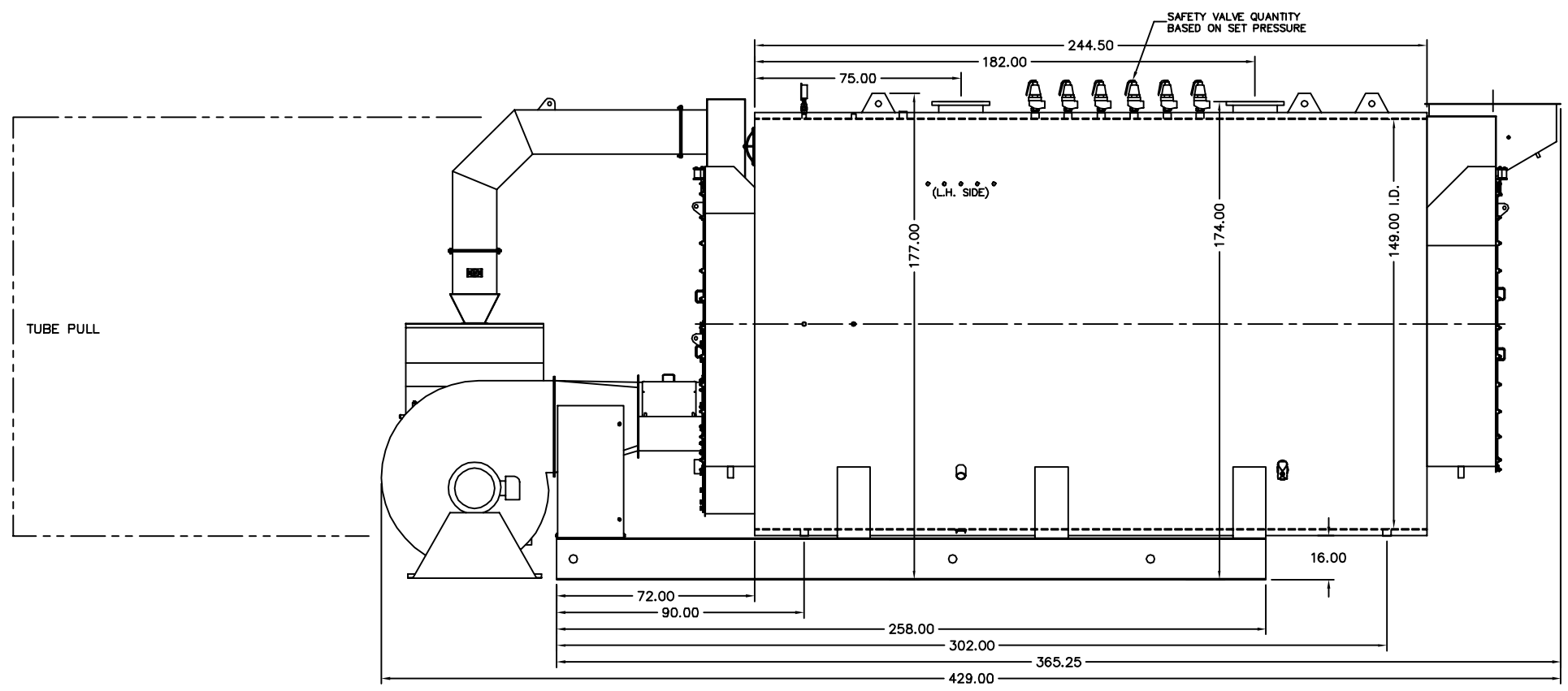

REFERENCE DRAWINGS

PV:	#101B0737
PV BASE:	#201B0051
FR FLUE BOX:	#205B0115
RR FLUE BOX:	#206B0128
PLENUM:	#212B0120

JOHNSTON BOILER COMPANY

THIS DRAWING IS THE PROPERTY OF THE JOHNSTON BOILER COMPANY. THE DISCLOSURES CONTAINED ON THIS DRAWING ARE MADE WITH THE UNDERSTANDING THAT THEY ARE CONFIDENTIAL AND WILL NOT BE USED IN ANY WAY DETRIMENTAL TO THIS COMPANY'S INTEREST.

SCALE CAD/FULL	JOHNSTON BOILER COMPANY FERRYSBURG, MICHIGAN 49409	SO#
DATE 2-27-07		
DRAWN JRS	BOILER TEMPLATE - 509 PFTS1800-3-30#W	
CHECKED		
APPROVED	DWG. NO. 300B0467-02	REV

DWG. NO. 300B0467

REVISIONS